Fries

VI003G

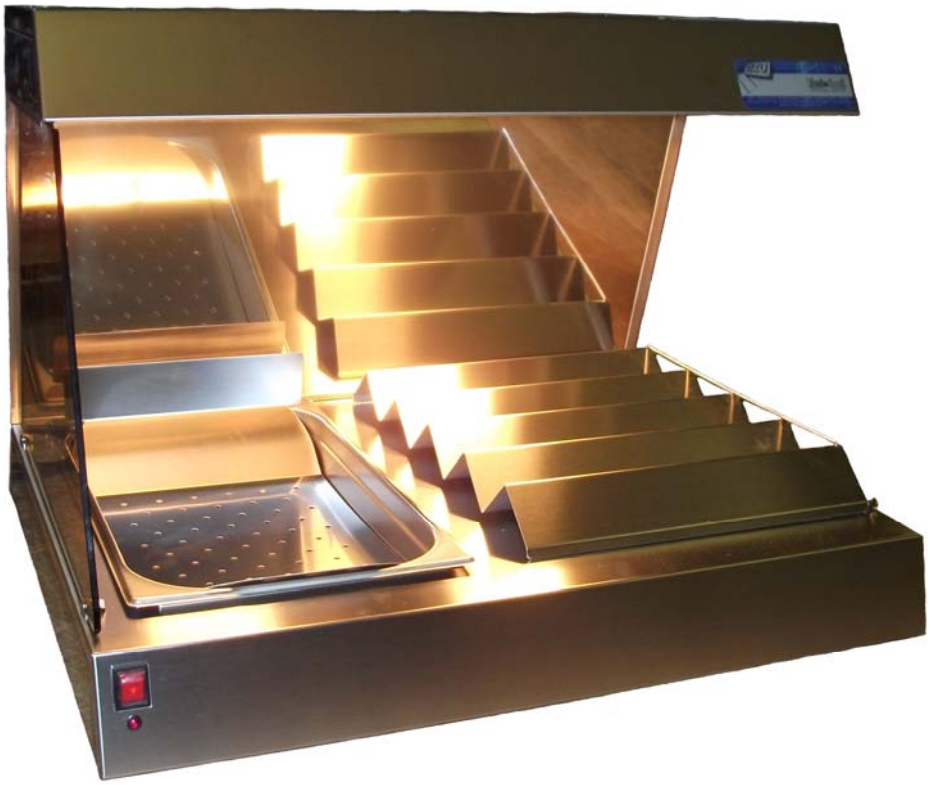

- Stainless steel construction
- 500W Lamp
- Left or right side configuration
- 4 channel holder for cooked and packaged fries
- Easy to clean removable parts

Fries Specification Page

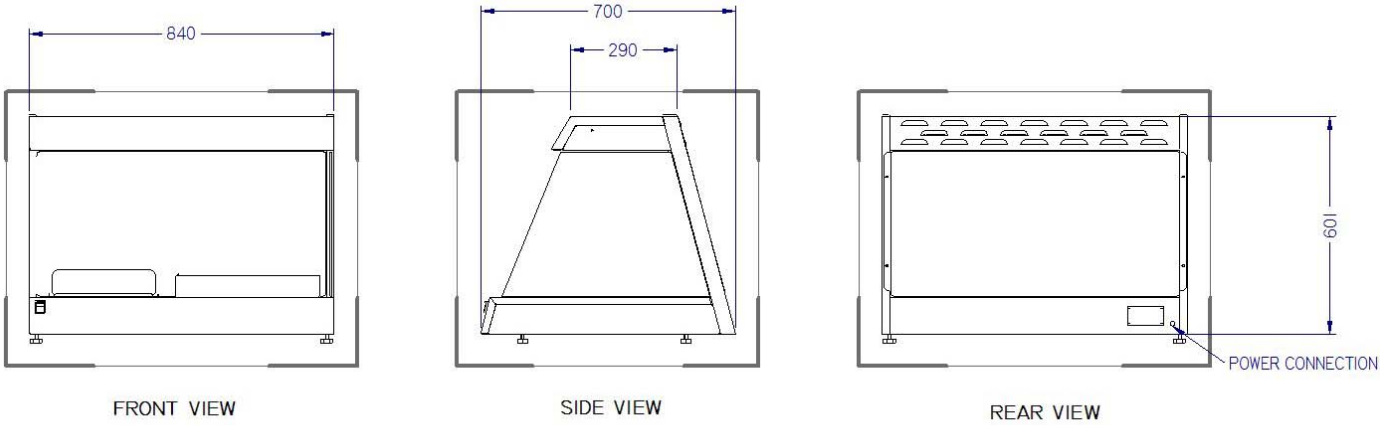

Model VI003G

Dimensions Height Width Depth	**Machine** 630mm 840mm 700mm
Weight	40 kg
Electrical Running Amps Connection Type International Option	**1 phase, 50HZ AC, 230v, 1Kw** 4.4 Amps 2m BESCHUKO Euro cable with, MFEUROCONVERT Euro to UK converter plug N/A

All ***Vizu Fries*** have been tested and checked for proper operation before leaving the factory.

Upon delivery please check the unit for damage. If the unit is damaged, contact the carrier, or fast food systems, immediately and file a damage claim (found in the back of the manual) Please retain all packing materials.

Damage must be reported within 7 days of delivery

General Description

The unit has been designed to hold fries once cooked, bagged or boxed foods ready for serving.

Assembly Instructions

Remove all packing from the unit.

Peel off all protective plastic covering from metal.

Remove drain plate and gastronorm pan.

Wash all removable parts in warm, soapy water and dry them thoroughly.

Installation

Position the *Vizu Fries in* desired position, close to a suitable electrical supply and connect.

Operating Instructions

1. With pan and bagging rack empty. Switch the heat lamps “ON”.
2. Allow unit to heat up for 20 minutes.
3. Dump fries into pan, salt fries as required.
4. Do not overfill dump pan, as fries at the bottom will go soft.
5. Bag and serve as quickly as possible.

Cleaning Instructions

1. Disconnect the unit from its power supply.
2. Remove bagging rack, pan and dump tray; wash and dry thoroughly.
3. Clean all stainless steel surfaces with proprietary stainless steel cleaner, such as Sheila Shine and a soft lint free cloth.

   NOTE: DO NOT USE ABRASIVE CLEANERS OR PADS AND DO NOT BLEACH.
4. Dry all surfaces thoroughly removing all moisture.
5. Re-connect to power supply.

Faultfinder

Any servicing must be carried out by qualified personnel.

Disconnect from power before servicing.

Problem	Possible Cause	Solution
Indicated ON / OFF switch does not light up	1a No power to machine	1aa Check machine is plugged in and switched on Check fuse in plug. Check circuit breaker at mains supply board is ON.
	1b ON / OFF switch is faulty	1bb Possible trip due to spike in power supply – reset and try machine.
Heat lamps do not light up	2a ON / OFF switch is in OFF position	2aa Switch on.
	2b ON / OFF switch is faulty	2bb Replace switch.
	2c In line plug separated	2cc Re-connect plug.
	2d All heat and light lamps are faulty.	2dd Replace lamps.
Only one heat-n-light lamp lights up	3a Lamp not lighting up is faulty	3aa Check that lamps are fitted correctly Replace lamp

Exploded Diagram

Item Number	File Name (no extension)	Quantity
1	01-02 BASE v0.01	1
2	01-09 BASE SIDE COVER v0.01	2
3	01-16 FRAME UPRIGHT (LEFT) v0.01	1
4	01-19 FRAME UPRIGHT (RIGHT) v0.01	1
5	01-03 HOOD v0.01	1
6	01-06 REFLECTOR v0.01	1
7	01-04 HOOD INSERT v0.01	1
8	48-21 HOOD LIGHT HOLDER v0.01	1
9	GN 1-1 h65.ipt	1
10	01-08 DRAIN PLATE v0.01	1
11	01 BAGGING ASSEMBLY v0.01	1
12	ON & OFF SWITCH	1
13	MF374-1029 LED INDICATOR	1
14	MF COB-CR	8
15	01 - SIDE GLASS 2009 v0.01	1
16	01-15 HOOD SUPPORT v0.01	1
17	01-15 HOOD SUPPORT MIRRORED v0.01	1
18	MF PT 400 200 BUNG	2
19	MFRTH34AFM ADJUSTABLE FEET	4
20	MF 805-849 GROMMET	2
22	01-14 ELECTRICAL COVER v0.01	1
23	MF500PLUGIN	2

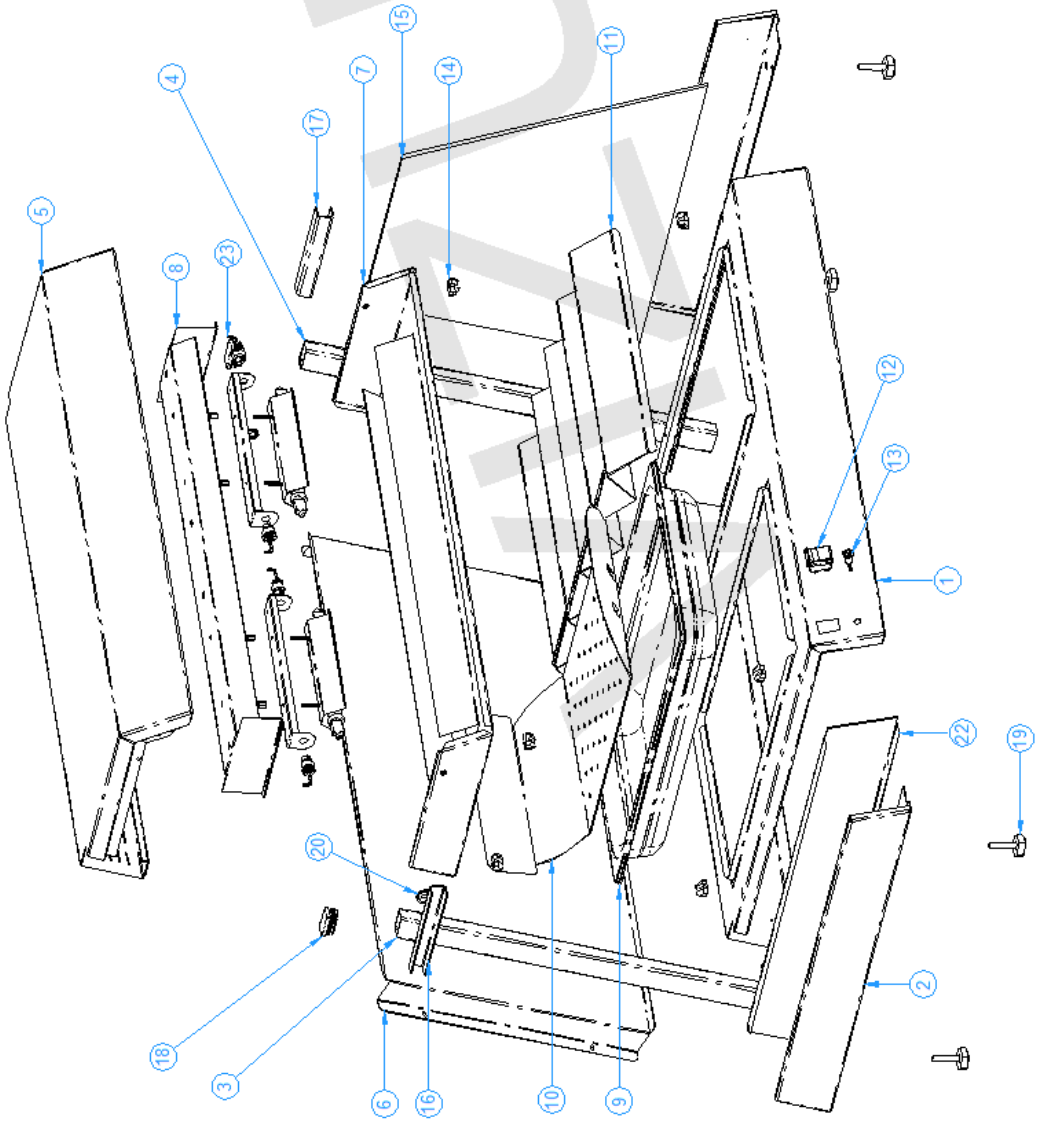

Spare Parts Listing

PART NO.	DESCRIPTION	QTY.	IMAGE
BESCHUKO	H05Rr-F 2Mtr. Rubber C032	1	
GSGAST40042	1/1GN pan 100mm deep	1	
MF817-8877	Black Nylon 66, strain relief cable bush	1	
MF354Z	2 Pole 5amp term block TB06	4	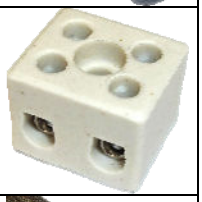
MFOHSL01	High temperature sleeving	1	
MF500HOLDER	IRL500Phr Holder+ Reflector For 500W Bulb	2	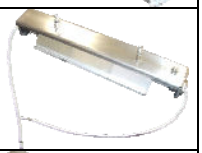
MF500PLUGIN	IRL500PJ 500W JKT Lamp Plug In	2	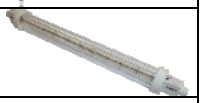
MF605-649	Grommet	2	
MF88161720	Single Pole Ceramic Blocks 88161720	2	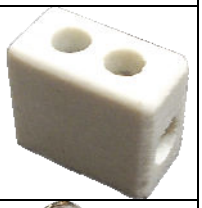
MFCOB-CR	Cob-Cr shelf support	8	
MFCOMMON1	Label 5 140mm x 53mm	1	

PART NO.	DESCRIPTION	QTY.	IMAGE
MFEUROCONVERT	Euro to UK converter plug In black 19-1032	1	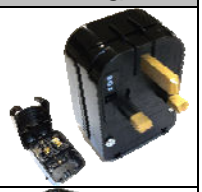
MFPT400200	Insert RCTI369 40 x 20mm, 1.0-2.5mm	4	
MFRTH34AFM	Adjusted (feet) Rth34Afm0839 49537	4	
VI566X401	566mm x 401mm Vizu Fries End Glass Bronze	1	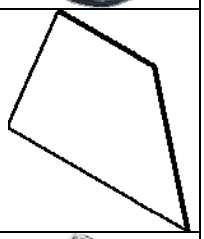
VILE14	Switch cover / bezel HD2/HD4 MFF1025 / MF1026	1	
VISW17	Rocker switch HD2 Revolva HD4 MFC1553ALR	1	
MF374-1029	10mm low profile lens indicator 230VAC	1	

Warning, when replacing bulbs

The lamps whilst being a high output unit are fragile. They must be handled with care and they must be kept clean. Guards are fitted to prevent dirt and grease contacting the bulbs. Grease from fingers will weaken the surface of the bulk this will lead to fracture and failure; bulbs should always be held using gloves or a wad of tissue to grip the bulb in.

Wiring Diagram

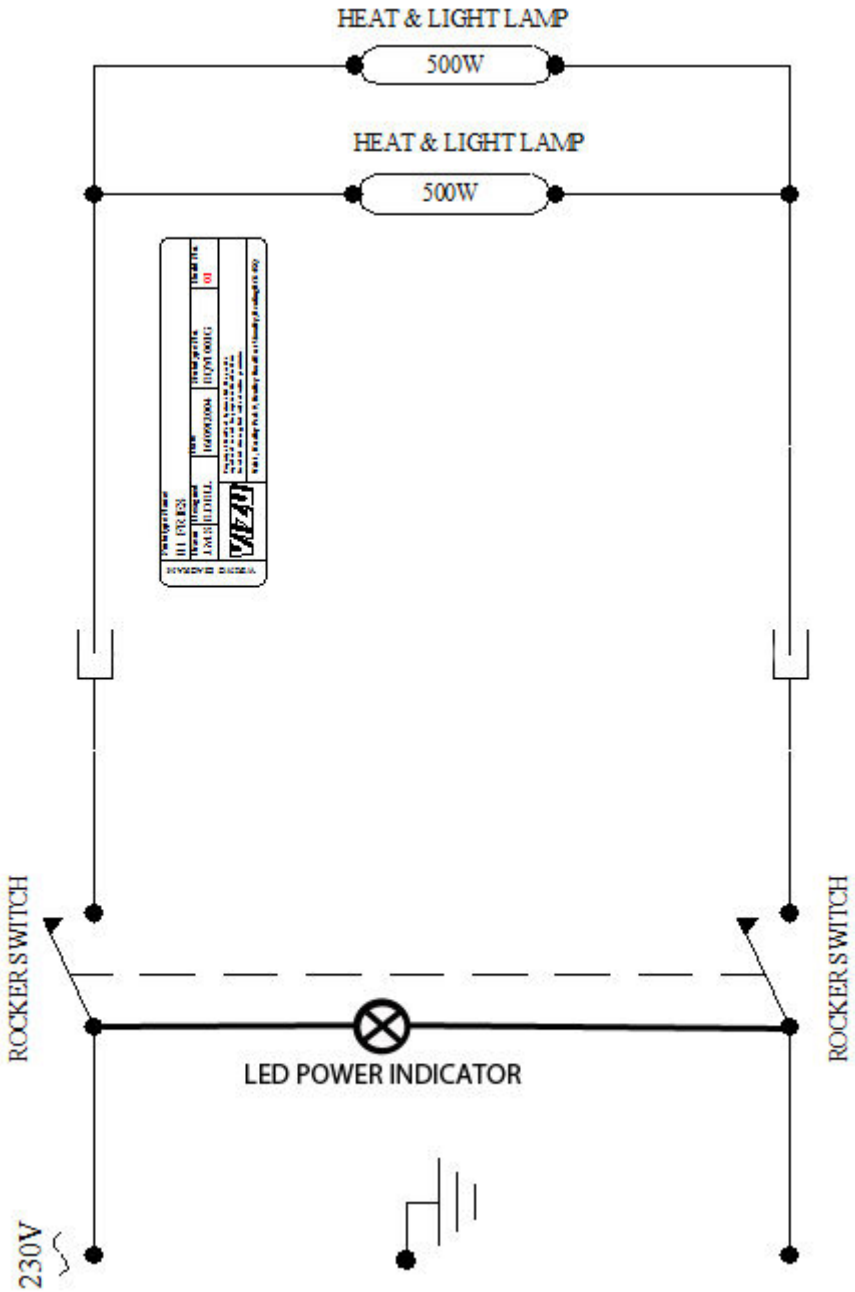

Damage claim form

Machine: **Vizu Fries**

Product code: **VI003G**

Customer name…….

Date of delivery…….

Machine serial number…….

Damage comments…….

…….

…….

…….

…….

Please indicate on the picture where the unit is damaged

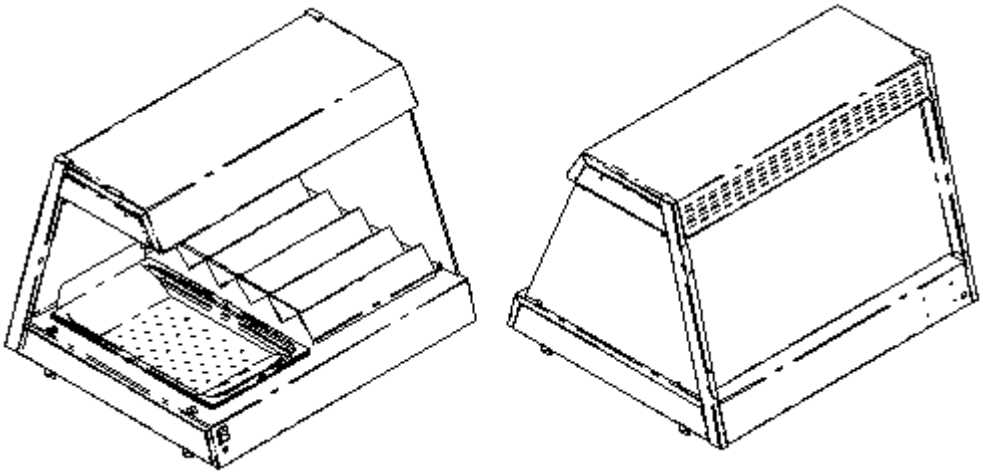

Courier name…….

Please cut this page out and post to ***Fast Food Systems***
(The address is on the back of this manual)

Terms and Conditions

Claims

No claim shall be entertained by the Company unless made in writing. Claims arising from damage or partial loss in transit must reach the Company within 7 days from the date of delivery. Claims for non-delivery must reach the Company within 10 days from the date of dispatch. All other claims must reach the Company within 7 days. Damaged goods must be retained for inspection/collection.

Returns

The Company does not operate a returns policy unless the goods are defective:

In circumstances where the Company agrees to accept return of goods, a charge of 25% of the invoice value will be made.

Warranty

UNITED KINGDOM AND REPUBLIC OF IRELAND

Excepting where otherwise specified all products are subject to 12 months parts and labour warranty Goods found defective will be repaired, credited or replaced without charge according to the terms of the Company's standard warranty, provided written notice is given within the guarantee period. In no case will the company be liable for repairs made without it's knowledge or sanction, or for indirect damage, or any consequential loss or expense incurred by purchasers.

Fast Food Systems Ltd, warrants to the original purchaser that the equipment supplied to be free from defective materials or workmanship for a period of 12 (twelve) months.

The following are NOT covered by warranty:

1. Failure or breakdown caused by incorrect installation.
2. Glass parts, electric lamps or door seals.
3. Adjustment or calibration of controls - this is a routine maintenance function.
4. Abuse or misuse, including cleaning.
5. Warranty labour is only carried out during normal working hours, calls attended to out of hours may be subject to surcharges.
6. The warranty will commence either on installation or 1 (one) month from date of dispatch - whichever is the sooner.
7. Warranty on spare parts purchased for equipment outside of the warranty period is 3 (three) months from date of sale.
8. Any faulty spare parts replaced under warranty must be returned with 7 days of supply.
9. Warranty is non-transferable.

Fast-Food-Systems Ltd will not be held responsible, financially or otherwise, for any loss of business as a result of equipment breakdown.

Note…

Note…

Note…

Model Number……..

Order ID/Job No……..

Machine serial number……..

Date of Manufacture ……./……./……..

Date of delivery……./……./……..

Date of commissioning……./……./……..

ENGLISH

Electrical equipment marked with this symbol may not be disposed of in European public disposal systems after 12 August 2005. In conformity with European local and national regulations (EU Directive 2002/96/EC), European electrical equipment users must now return old or end-of-life equipment to the manufacturer for disposal at no charge to the user.

Note: *For return for recycling, please contact the equipment manufacturer or supplier for instructions on how to return end-of-life equipment for proper disposal.*

Fast Food Systems Limited

Manufacturer & Distributor of Catering Equipment

Unit 1 Headley Park 9 Headley Road East

Woodley Reading Berkshire RG5 4SQ

Tel: 0118 944 1100 Fax: 0118 944 0350

Email: service@fast-food-systems.co.uk

Website: www.fast-food-systems.com

ISSUE 04: 28th June 2017